ITMO UNIVERSITY

ITMO UNIVERSITY

Department Instrument-Making Technology "ITMO"

Collaboration between department and commercial company for integrated manufacturing systems development.

Dr. Evgeny I. Yablochnikov

Chief of Department of IUniversity
CEO Bee Pitron Co LTD

2014

Table of contents:

1. Profile of participants
2. Projects
3. Network Laboratories
4. New researches
5. Experiential Learning

Instrument-Making Technology Department

- more than 250 students (bachelors and masters)
- more than 20 Ph.D. candidates
- more than 25 professors and lecturers

<u>Bachelors directions:</u>

- Instrument making technologies
- Informatics and computer engineering

<u>Masters directions:</u>

- Manufacturing process engineering
- Product lifecycle management support
- Designing of an integrated automated systems
- Cooperative educational program with a Technical University of a Bishkek (Kyrgyzstan)

Bee Pitron Co LTD. Profile

- The Company was found in 1992
- Representations: Saint-Petersburg, Moscow, Krasnoyarsk
- More than 50 employees
- Strategic partner of ITMO University
- Developer and integrator of a PLM-solutions (supplier of a software, education, consulting, engineering, R&D)

Bee Pitron Co LTD. Partners

- Dassault Systemes
- MSC Software
- e-Xstream Engineering
- Open Engineering
- IGE+XAO

- Cimatron Group
- CoreTech System
- C3P Software
- Gibbs and Associates
- Metalcam
- CGTech
- IMS

Bee Pitron Co LTD. Profile

- The Company was found in 1992
- Representations: Saint-Petersburg, Moscow, Krasnoyarsk
- More than 50 employees
- Strategic partner of ITMO University
- Developer and integrator of a PLM-solutions (supplier of a software, education, consulting, engineering, R&D)

Human resources management (HR) cooperation

- 5 employees Bee Pitron Co LTD are studying the Master Program in ITMO University
- 4 employees Bee Pitron Co LTD are studying the PhD Program in ITMO University
- 30% of employees are graduated of ITMO University (Department Instrument-Making Technology "ITMO")
- Employees of Bee Pitron Co LTD are supporting an educational process of CAD/CAE/CAM/PDM systems
- Collaboration for joint projects

Projects

ITMO UNIVERSITY

Development of basic design processes for new-generation polymer composite devices for aerospace, navy and other applications.

САТУРН
НАУЧНО-ПРОИЗВОДСТВЕННОЕ ОБЪЕДИНЕНИЕ

Development of design and manufacturing processes for compressor stator blades based on polymer composite materials.

РЕШЕТНЕВ
ОАО «ИСС»

Development of manufacturing processes for spacecraft's primary structure components based on polymer composite materials.

Projects

Conceptual design of magnetograph main mirror for Interhelioprobe space mission.

Conceptual design of light weighted main mirror for TACHOMAG space telescope . Reliability and shape stability criteria analysis.

Integrated application of CAE-systems for product or material design

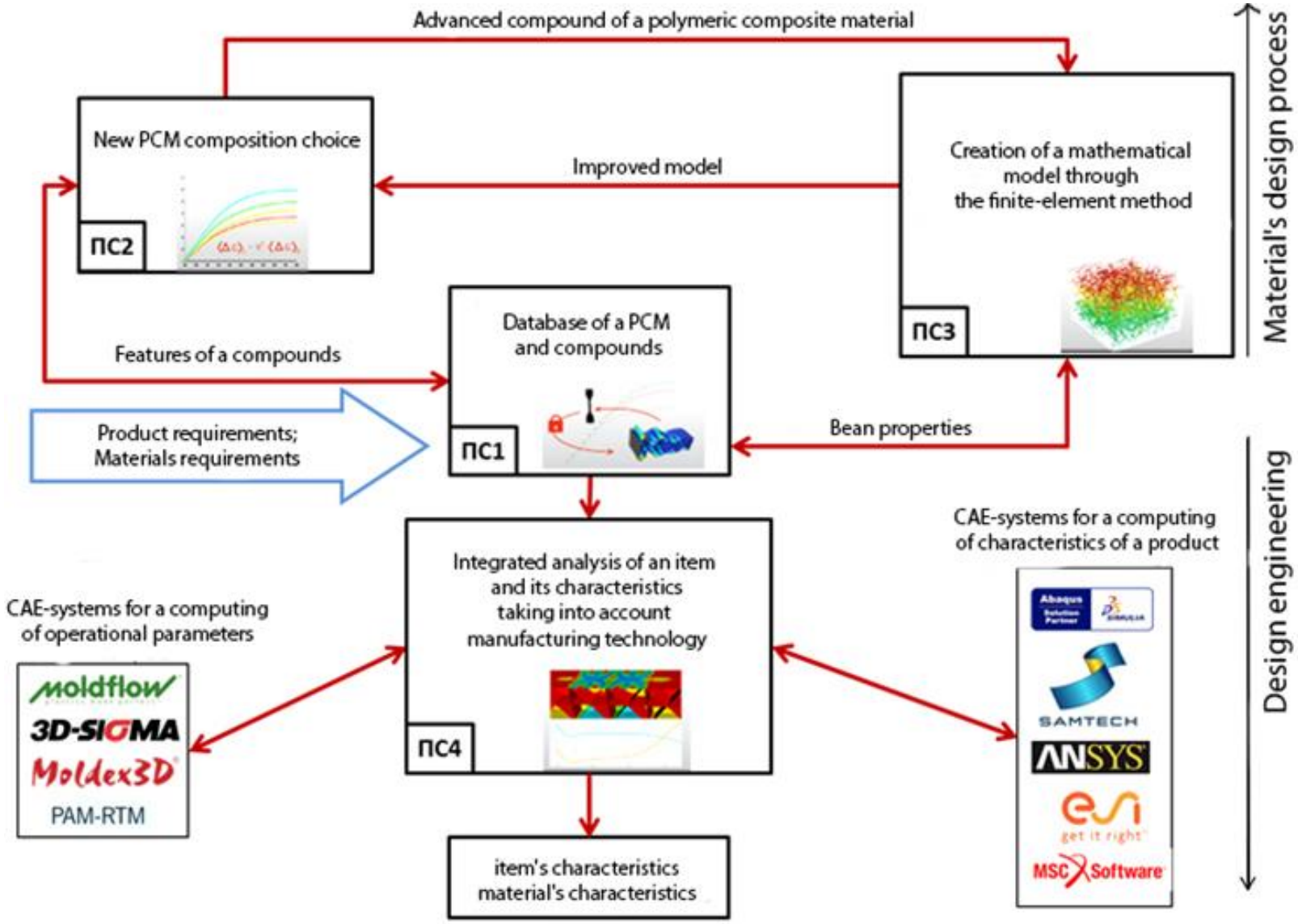

Federal programs

The University purchased a software and equipment in a frame of implementation of the Federal Programs(11):

1. Development of an innovative education programs (2007-2008)

2. The development programs of the National Research Universities (2009-2018)

ITMO UNIVERSITY

Engineering center laboratories

Information laboratories: virtual model development

- Integrated information systems laboratory
- Manufacturing process simulation modelling Laboratory
- Applied software systems design laboratory

Results of a virtual modelling and analysis

Results of an research, recommendations, knowledge

Technological laboratories: acquisition of a physical models

- Additive technologies laboratory
- Intelligent technological equipment laboratory
- Control and measuring equipment laboratory
- Surface mount technology laboratory
- Injection molding laboratory
- Automated assembly laboratory

Integrated usage of the academic laboratories resources

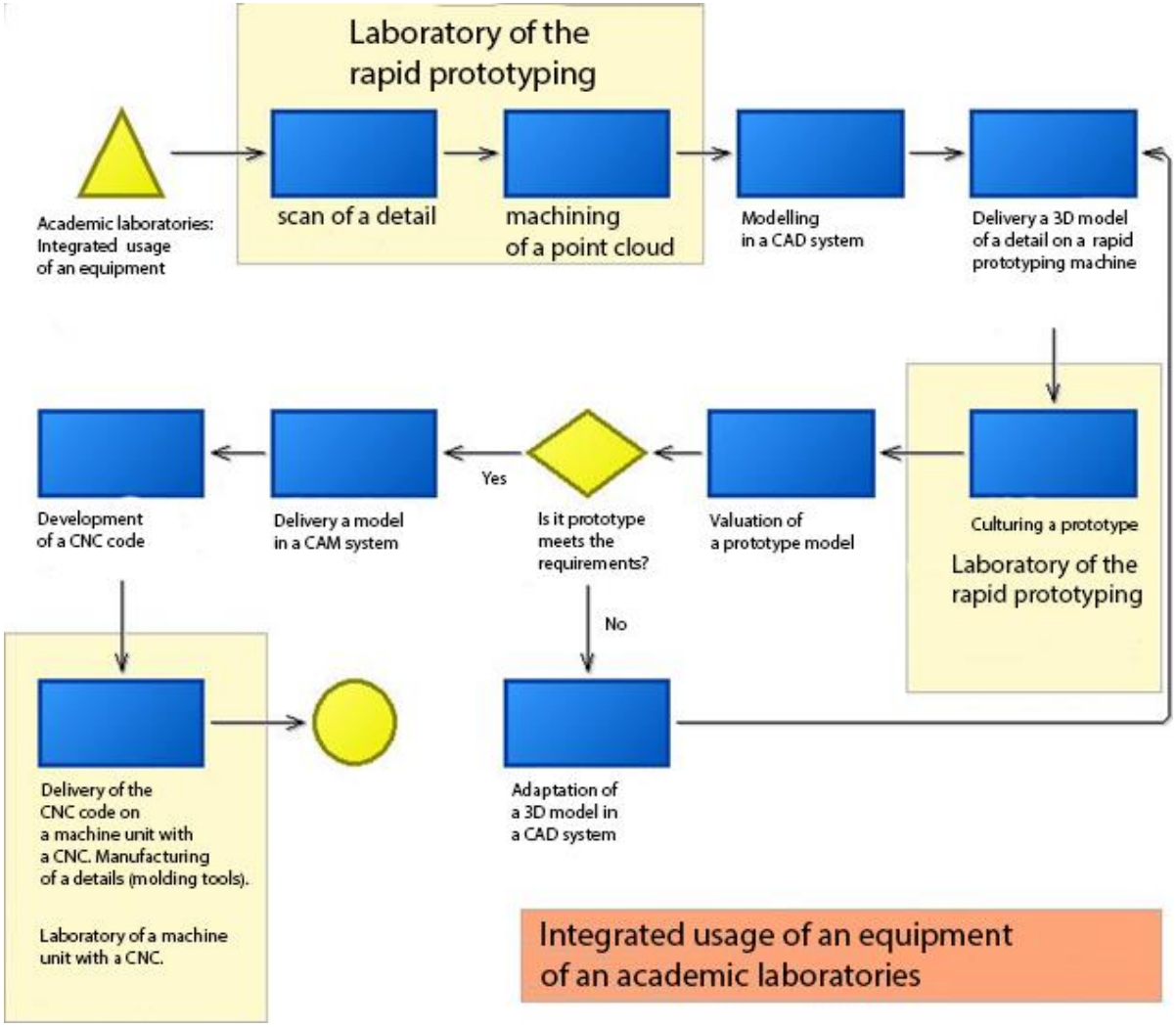

Additive technologies

3D printers Dimension и Objet

DIMENSION 1200es SST

- Size of a worktable: 254x254x305 мм
- Layer thickness 0,254 мм
- Minimum thickness of a wall: 0,25 мм
- ABS + plastic material 9 colors

Objet EDEN 350V

Size of a worktable: 350x350x200 мм
Resolving power micrometer (dpi): X 42 (600) Y 42 (600) Z 16 (1600)
Minimum thickness of a wall: 0,6 мм
Maximum performance rate: 20 мм/час
Maximum self-supporting operating period: 72 hours
Material: photopolymers

Additive technologies

3D-scanner ATOS I

- Number of points after the one measurement: 2,000,000
- Small measured volume: 125x100x90 мм
- Measuring accuracy for a small volume: 50 мкм
- Large-scale measuring volume: 500x400x400 км
- Measurement accuracy for a large-scale volume: 100 мкм

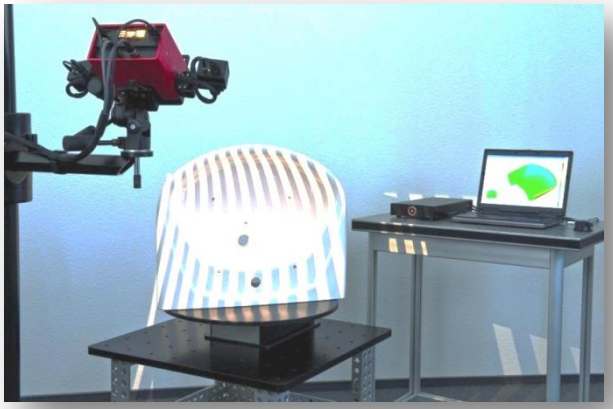

Additive technologies.
Implementation support of inner and external projects

Support of the assembling line	Paintball gun	Lens in the framework for LED optics
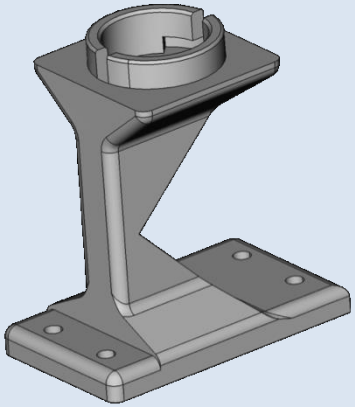	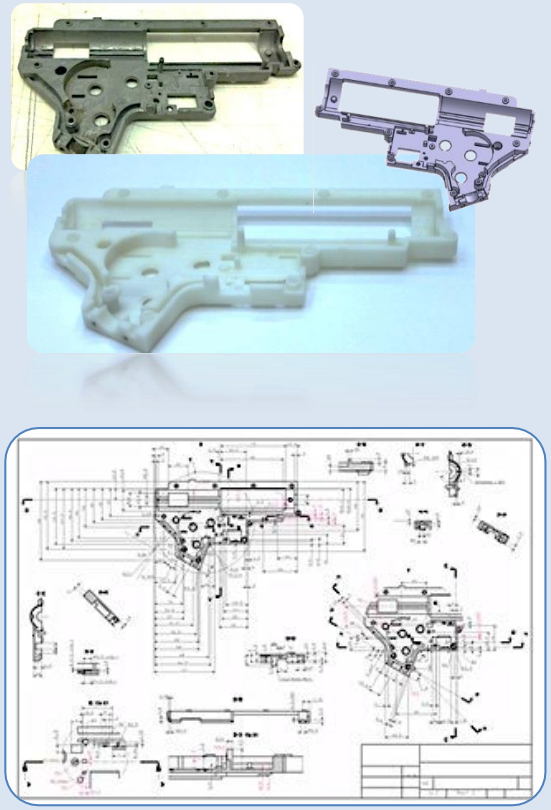	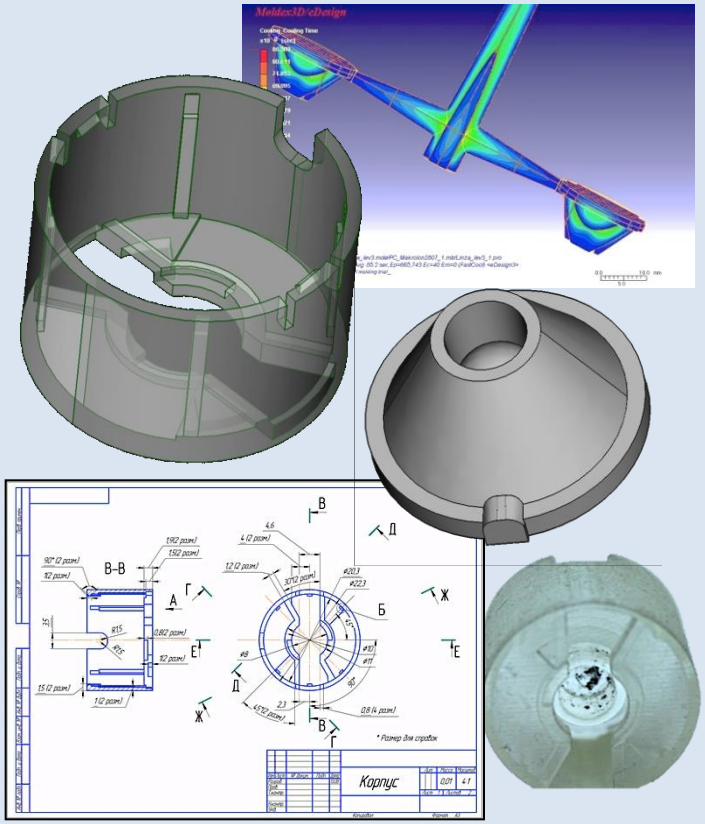

Modern CNC-equipment

Capstan and turret lathe HAAS SL-10THE

Maximum positionable diameter:
over the bedplate - 413 мм
over the carriage - 203 мм
Maximum machinable diameter - 279 мм
Maximum length of the machining (if the turning operation is between the centers) - 356 мм
Maximum length of the turning operation for an ordinary tool- 285 мм
Maximum spindle speed - до 6000 RPM
Accuracy
Positional accuracy ±5μm
Positioning precision±2,5μm

Milling machine HAAS Super Mini Mill

Operating space
X axis motion: 406 мм
Y axis motion: 305 мм
Z axis motion: 254 мм
Spindle height from the table: 102-356 мм
Spindle
Spindle speed: 10000 R.M.P.
Spindle horsepower: 11,2 kW
Accuracy
Positional accuracy ±5μm
Positioning precision±2,5μm

ITMO UNIVERSITY

Modern CNC-equipment

Micromilling 5-axis CNC machine Primacon PFM 24 Ngd
Stage positioning: +/- 1,0µm
Positioning precision : +/- 0,5µm

Перемещения X Y Z (240 x 240 x 240) мм.
Скорость перемещений, мм /мин 0,005 - 12,000
Ускорение, 10 м /сек²
Рабочий стол X Y Z (345 x 295 x 180) мм
Точность (по VDI\DGQ 3441): +/- 1 мкм Повторяемость: 0,5 мкм
Позиционирование: + /-1,0 мкм
Система ЧПУ - HEIDENHAIN
Зажимной патрон 32-местный (макс. длина инстр. 107 мм, макс. диаметр 40 мм)
Система смазки и охлаждения
Система минимальной смазки - туман
Система охлаждения + Стабилизатор температуры
Оптические приборы:
Оптический прибор, 30 - кратность увеличения
Измерительные системы
Лазерная измерительная система
Замер заготовки, передача данных по инфракрасному каналу - 3-D Тестер
Сопло для очистки инструмента
Диаметр инструмента – от 100 мкм и менее
Отношения длины к диаметру инструмента: от 10 до 100
Точность, 0,1 мкм и меньше;
Шероховатость поверхности Ra – от 0,2 мкм. и меньше;
Обрабатываемые толщины стенок деталей – от 0,5 мм. и <
Обрабатываемый материал твердость – 45HRC и выше.

Measurement technologies

Принцип измерения	контактный, с применением безопорных щупов
Класс точности по DIN4772	Класс 1 (3%)
Разрешение	0,001 мкм
Длина трассирования lt	переменная от до 0,1 - 200 мм
Измеряемые параметры шероховатости:	
DIN EN ISO 4287	Ra; Rz; Rmax; Rt; Rq; Rsk; lmo; lo; Rdq; da; ln; La; Lq; Rz-ISO; R3z; Rpm; Rp3z; R3zm; Rp; D; RPc; RSm; Rpm/R3z; lr; Rku; tpif; Rdc; tpia; tpip; tpic; Rt/Ra; Rz1; Rz2; Rz3; Rz4; Rz5; Rmr; Rmr%; Api
Профильные параметры по DIN EN ISO 4287	Pt.; Pp; Pz; Pa; Pq; Psk; PSm; Pdq; lp; Pku; tpaf; tpaa; tpab; tpac; Pmr0; APa; APa%; Pmr; Pmr%; Pdc
Параметры волнистости по DIN EN ISO 4287	Wt.; Wp; Wz; Wa; Wq; Wsk; WSm; Wdq; lw; Wku; Wdc

Profilometer
Hommel Tester T8000

Measurement technologies

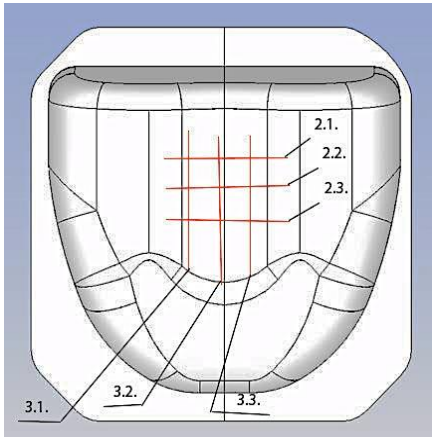

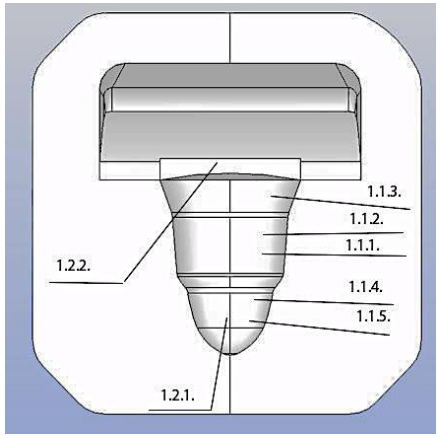

№	Ra, µm
1.1.1	0.08
1.1.2	0.10
1.1.3	0.10
1.1.4	0.08
1.1.5	0.09
1.2.1	0.07
1.2.2	0.34
2.1	0.05
2.2	0.04
2.3	0.03
3.1	0.06
3.2	0.04
3.3	0.13

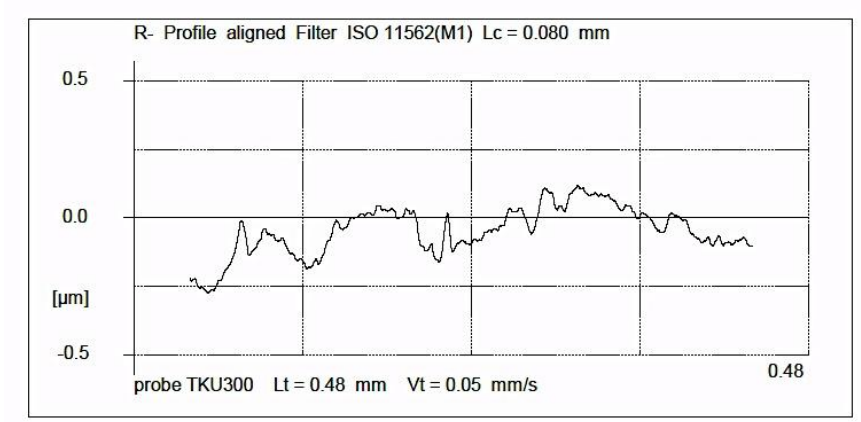

Pt	11.89 µm
Ra	0.08 µm
Rq	0.10 µm
Rz	0.20 µm
Rmax	0.26 µm

1.1.1.

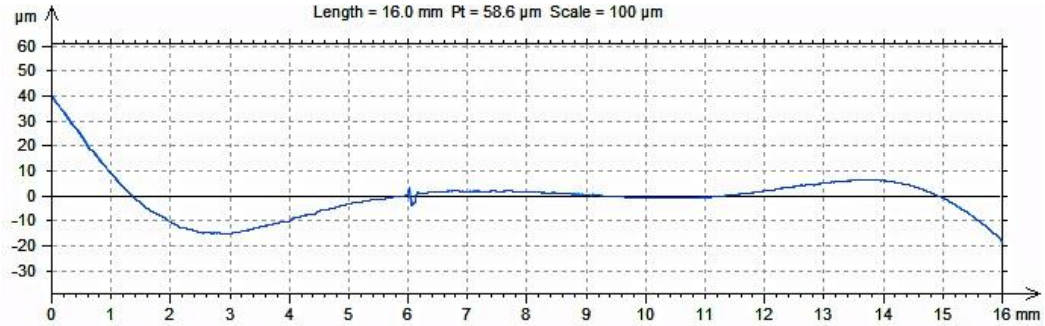

Measurement technologies

Coordinate measuring machine Global Performance

- Part sensing according to the sketch or draft;
- Conformance audit to the mathematic model
- Reverse-engineering

Ход осей (мм)		
X	Y	Z
500	700	500

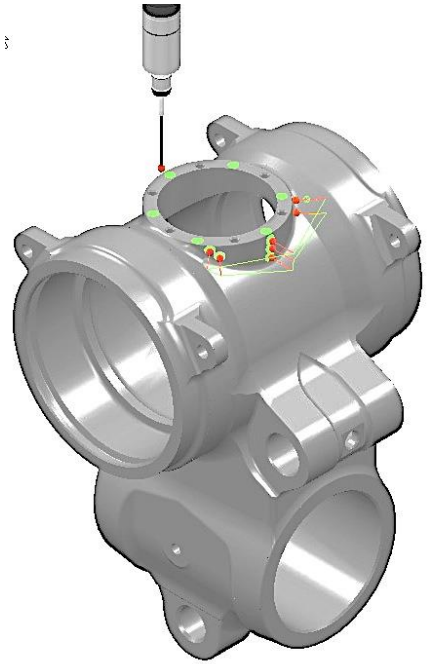

Measurement technologies

Measurement by test points or product full scanning and comparing with an basic 3D model

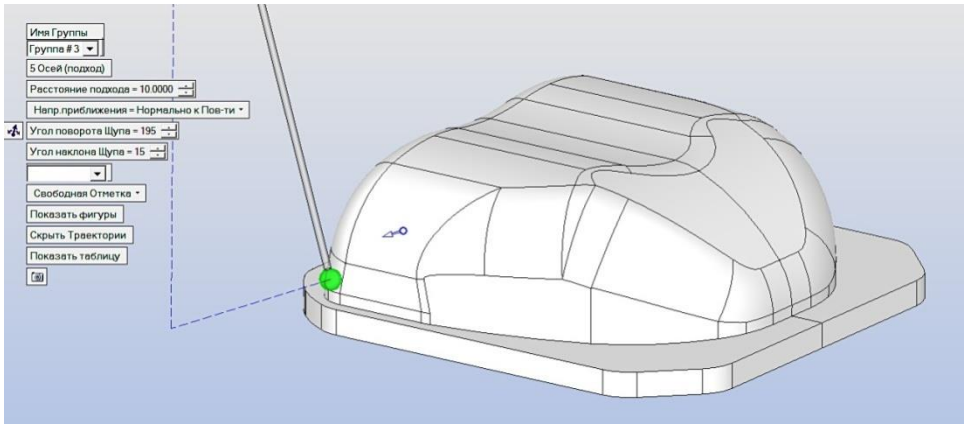

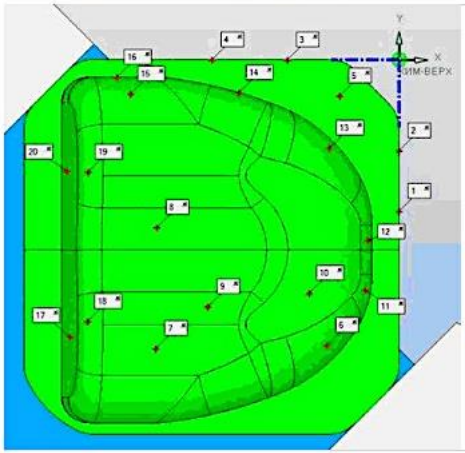

КОММЕНТАРИЙ	НОМИНАЛ	+ В.О.	- Н.О.	ИЗМЕРЕНО	ОТКЛ	ВНЕ_ДОП.
1 - X (MM)	0.000	0.050	0.050	-0.051	-0.051	0.001
1 - Y (MM)	-8.929	0.050	0.050	-8.930	0.000	
1 - Z (MM)	-0.573	0.050	0.050	-0.568	0.004	
2 - X (MM)	0.000	0.050	0.050	-0.049	-0.049	
2 - Y (MM)	-5.338	0.050	0.050	-5.342	-0.003	
2 - Z (MM)	-0.533	0.050	0.050	-0.529	0.004	
3 - X (MM)	-6.549	0.050	0.050	-6.553	-0.004	
3 - Y (MM)	0.000	0.050	0.050	-0.069	-0.069	0.019
3 - Z (MM)	-0.457	0.050	0.050	-0.459	-0.002	
4 - X (MM)	-10.995	0.050	0.050	-10.996	-0.001	
4 - Y (MM)	0.000	0.050	0.050	-0.096	-0.096	0.046
4 - Z (MM)	-0.387	0.050	0.050	-0.379	0.008	
5 - X (MM)	-3.508	0.050	0.050	-3.510	-0.002	
5 - Y (MM)	-2.147	0.050	0.050	-2.151	-0.004	
5 - Z (MM)	0.000	0.050	0.050	-0.011	-0.011	
6 - X (MM)	-4.255	0.050	0.050	-4.265	-0.010	
6 - Y (MM)	-16.821	0.050	0.050	-16.881	-0.060	0.010
6 - Z (MM)	3.950	0.050	0.050	3.971	0.021	

Usage of equipment in the projects. International project "Specter - UF"

Engineering of the technologies and manufacturing a block of spectrographs, included in the system of telescope T-170M

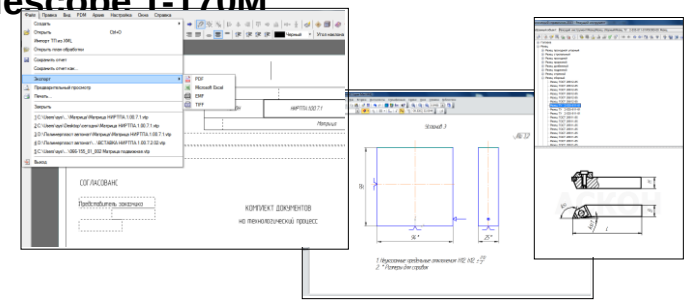

- Building a 3D models of the die in the CAD/CAM-system Cimatron E
- Engineering and execution of the technological documents with a CAD-system Compas-3D and CAD-system «Vertikal»
- Designing of the toolpath contour
- Designing of the CNC in the CAD/CAM-system Cimatron E for a vertical-milling HAAS SMM
- Assemblage of the assembly-and-disassembly device
- Optimization of the technical process and manufacture a frames
- Control of the asperity parameters on the profile recording instrument
- Control of the sizes accuracy with coercive force meter

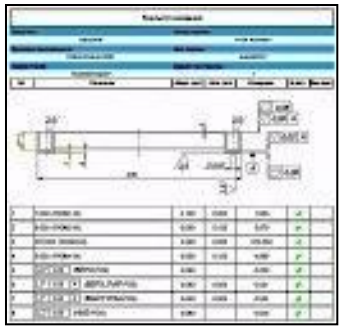

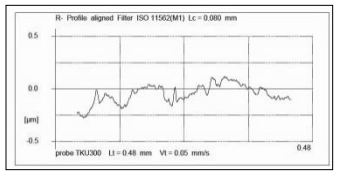

Injection molding technology

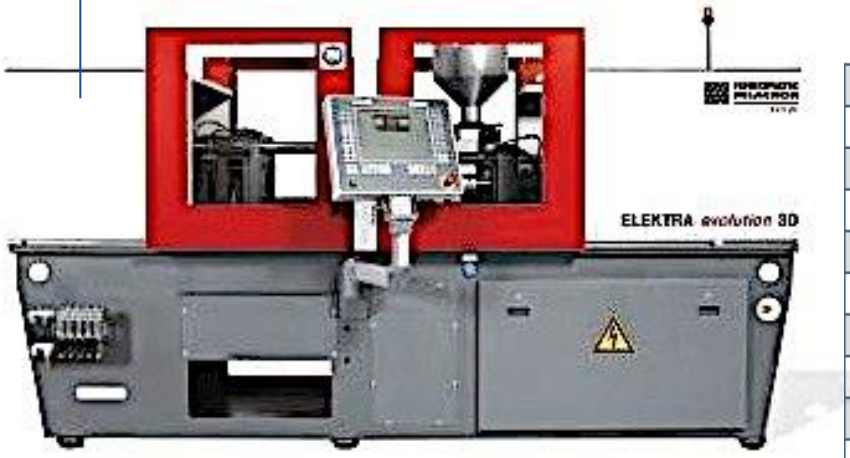

Injection molding machine Ferromatik Milacron EE30-55

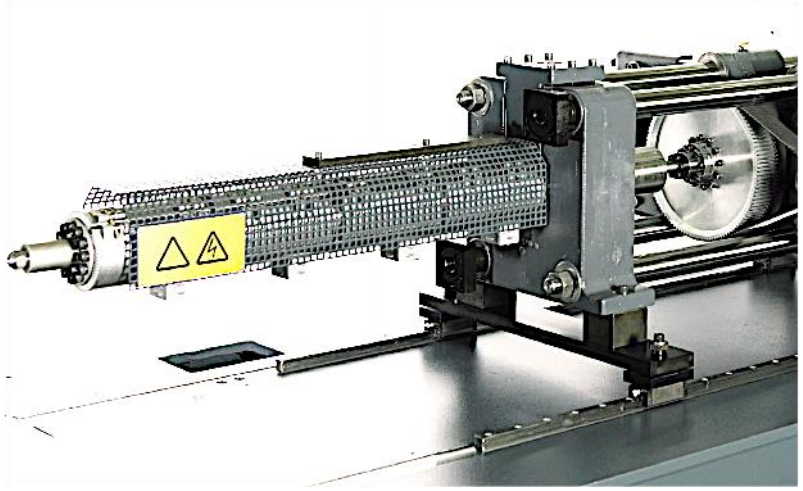

Диаметр шнека	мм	18
Давление впрыска	бар	2500
Рабочий объем цилиндра	см	19
Перемещение шнека	мм	75
Вес отливки, макс.	г	17
Объем потока впрыска	см/с	52
Длина шнека	L/D	22
Установленная "греющая" мощность	кВт	4,8
Количество зон нагрева		4
Закрывающий блок		
Усилие закрывания	кН	300
Усилие раскрывания	кН	105
Ширина раскрытия литьевой формы	мм	250
Допустимый макс. масса литьевой формы (подвижная /неподвижная)	кг	200 / 100
Расстояние между плитами, макс.	мм	580
Расстояние между колоннами в свету H x V	мм	300 x 300
Усилие выталкивателя	кН	25
Ход выталкивателя	мм	100
Общие характеристики		
Общая потребляемая мощность [3)]	кВт	11
Размеры машины Д x Ш x В	мм	3420 x 1200 x 1840
Масса нетто	кг	2700

ITMO UNIVERSITY

Integrated process of development and manufacturing

№	Process stage	Software	Equipment
1	Designing a product	CATIA, Zemax, OOFELIE	
2	Applying an additive technologies	Objet Studio, Catalyst EX	3D-printers Objet and Dimension
3	Modelling a molding processes	Moldex3D	
4	Designing a molding forms	CATIA Cimatron E	
5	Preparing to manufacture. Manufacturing a shaping part	CATIA Cimatron E	Processable centers Haas и Primacon
6	Control of a shaping part	PC-DMIS CAD++	Coercive force meter Global Perfomance, Profilometer Hommel Tester T-8000
7	Product manufacture	Moldex3D	Injection-molding machine EE30-55
8	Control of a product	ITMO Laboratories	ITMO Laboratories
9	Developing an integrated automatized system	SmarTeam	

Project: «Design and manufacturing technologies of optical items from polymer materials»

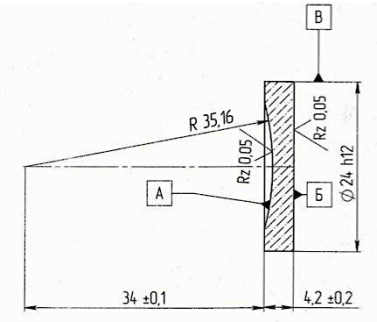

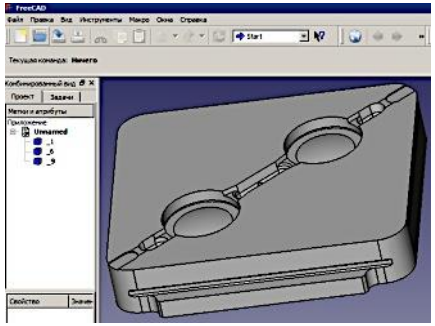

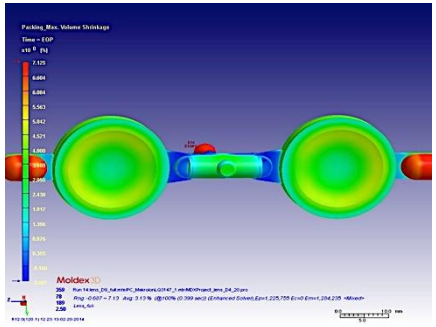

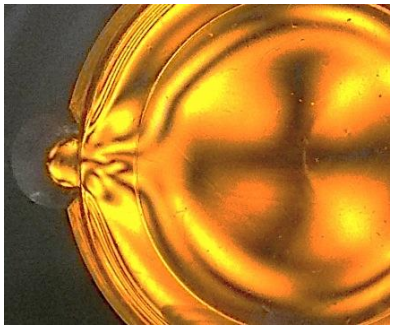

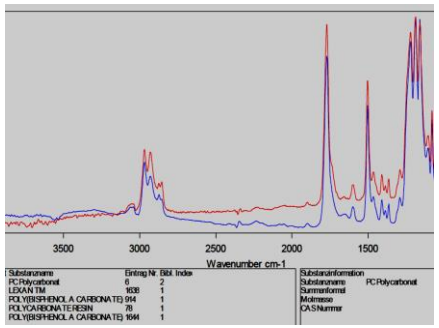

1 – part of a draft
2 - CAD-model of a shaping part
3 - shaping part prototype

4 - CAE-analysis in a Moldex3D
5 - aluminum shaping part
6 - end product

7 - control of a resting potential
8 - control of material

Applying of additive technologies in injection molding processes

Additive technologies in a processes of injection molding for a thermoplastic materials

- Experimental kit of a shaping part
  - 
  - PolyJet
    SLA
    FDM
    SLS
- A shaping part and cooling system (from metals)
  - 
  - EBM
    LENS
    LOM
- Visual simulation of a CAE-computing
  - 
  - 3DP
    (InkJet)
- Master model for a molding in the silicon forms
  - 
  - PolyJet
    SLA

Potential of engineering center cooperation

Scientific, educational and industrial problems

- Design and manufacturing of prototypes and prototype parts in the performance of R&D
- Researches at all stages of integrated process
- Technology development projects, processes, data management in automated systems
- Accumulation of technological knowledge bases and data
- The integrated process is considered as part of the model of digital production

ITMO UNIVERSITY

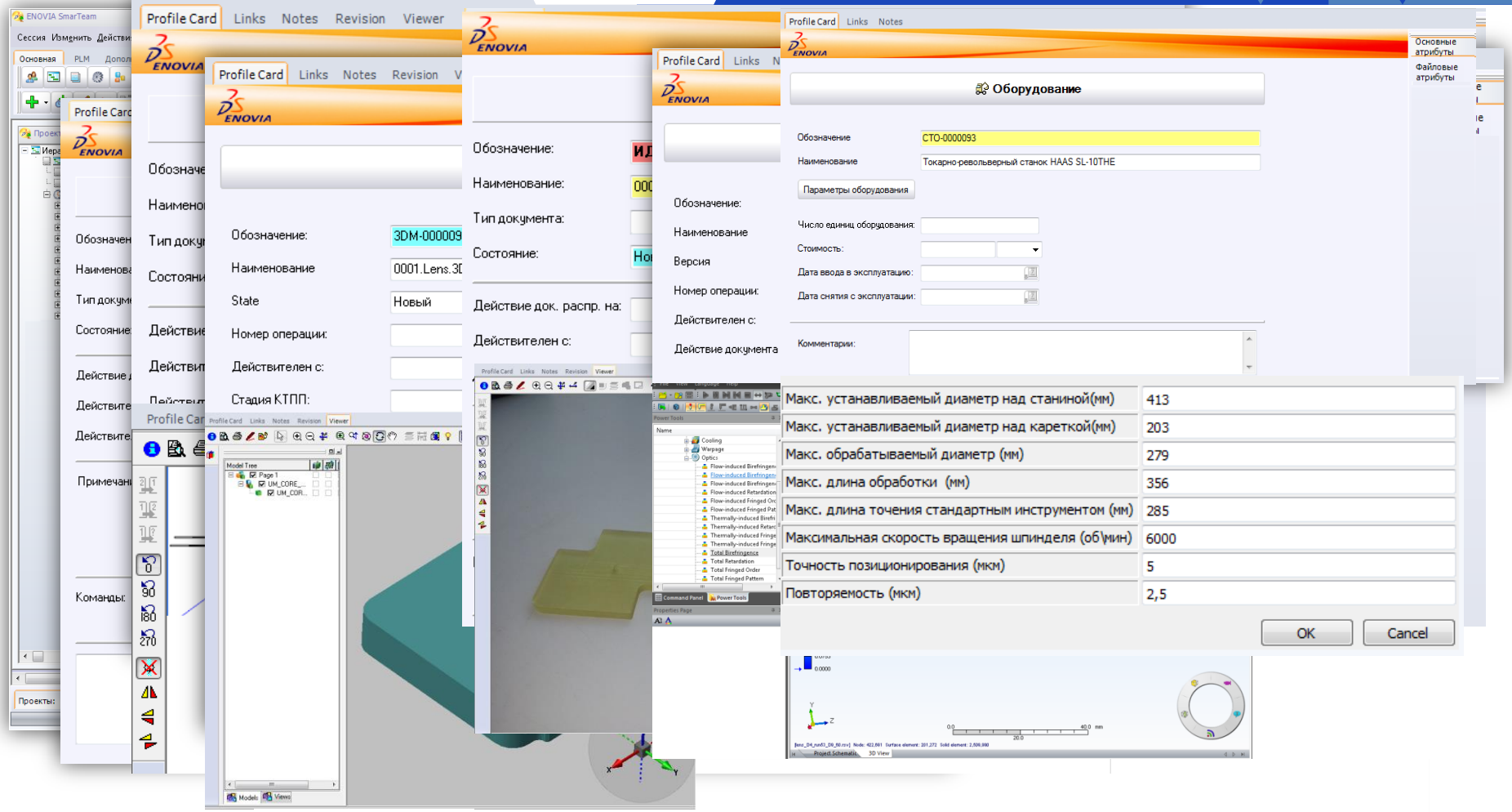

Projects data management in PDM-system

ITMO UNIVERSITY

Process basic scheme

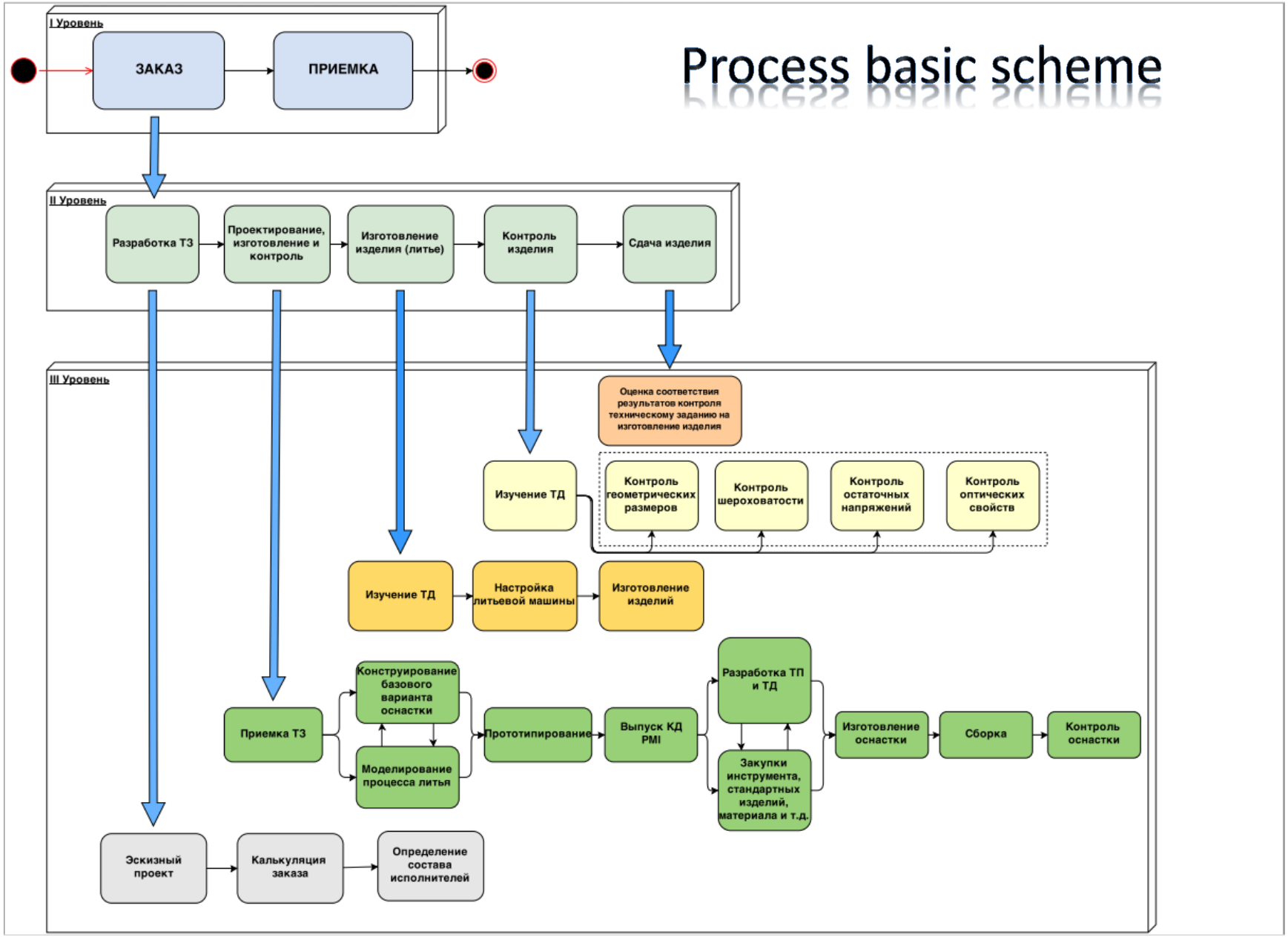

Intelligent manufacturing systems

1. Process modeling of automated device assembly and installation of prototype assembly line;

2. Development of systems for industrial process control based on automatic identification of objects;

3. Development and applying new additive technologies.

Assembly process modelling and automation

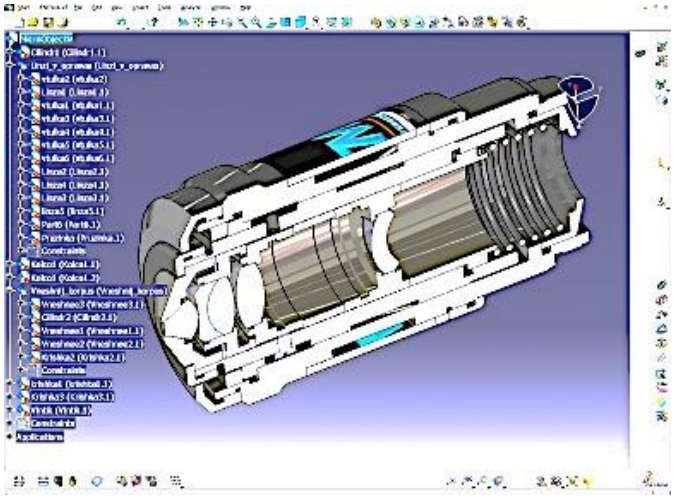

1. Product model

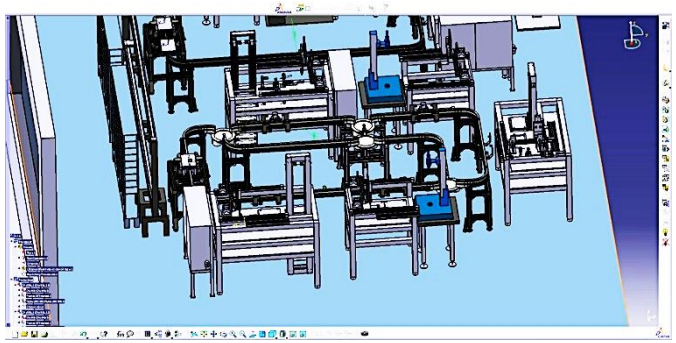

2. Model of the production system

3. Automated assembly line optical products

Brackets strength analysis for assembly line components before manufacturing on additive equipment

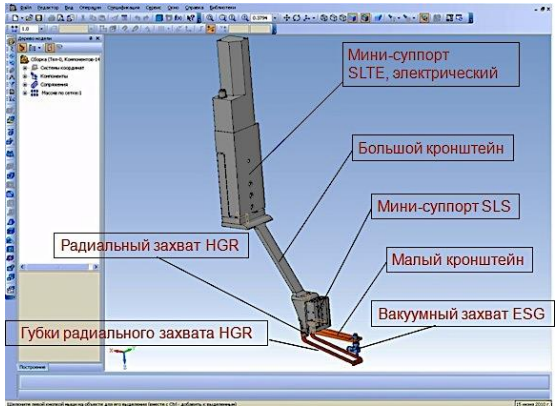

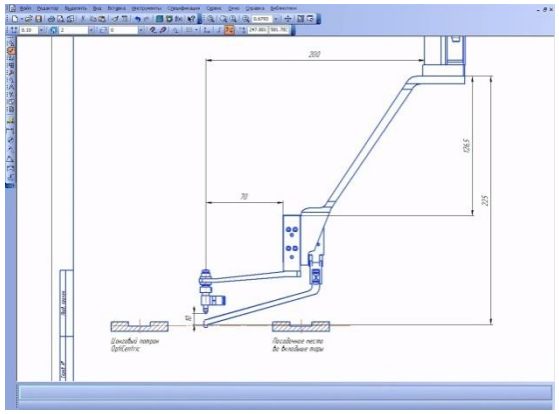

Graphs of the distribution of loads in the structure when pressure is applied and the displacement structure

Small bracket	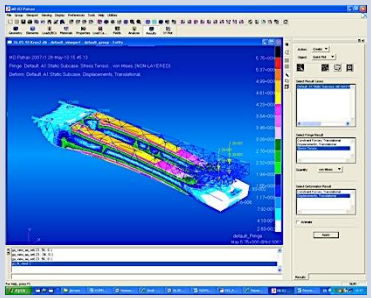	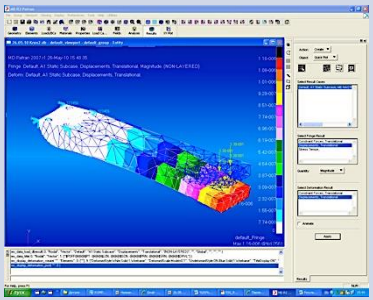
Big bracket	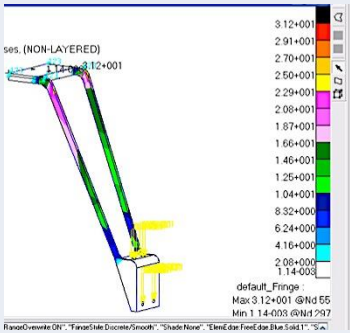	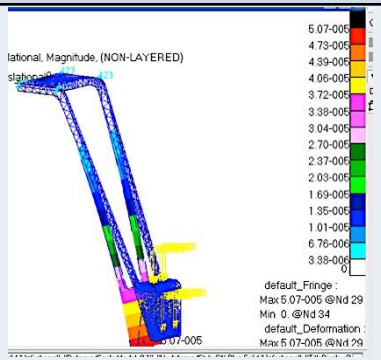

Intelligent manufacturing systems

1. Process modeling of automated device assembly and installation of prototype assembly line;

2. Development of systems for industrial process control based on automatic identification of objects;

3. Development and applying new additive technologies.

Adaptive management of an intelligent sensor systems, based on a data measurement of a CAE-computing and providing a simulation modelling

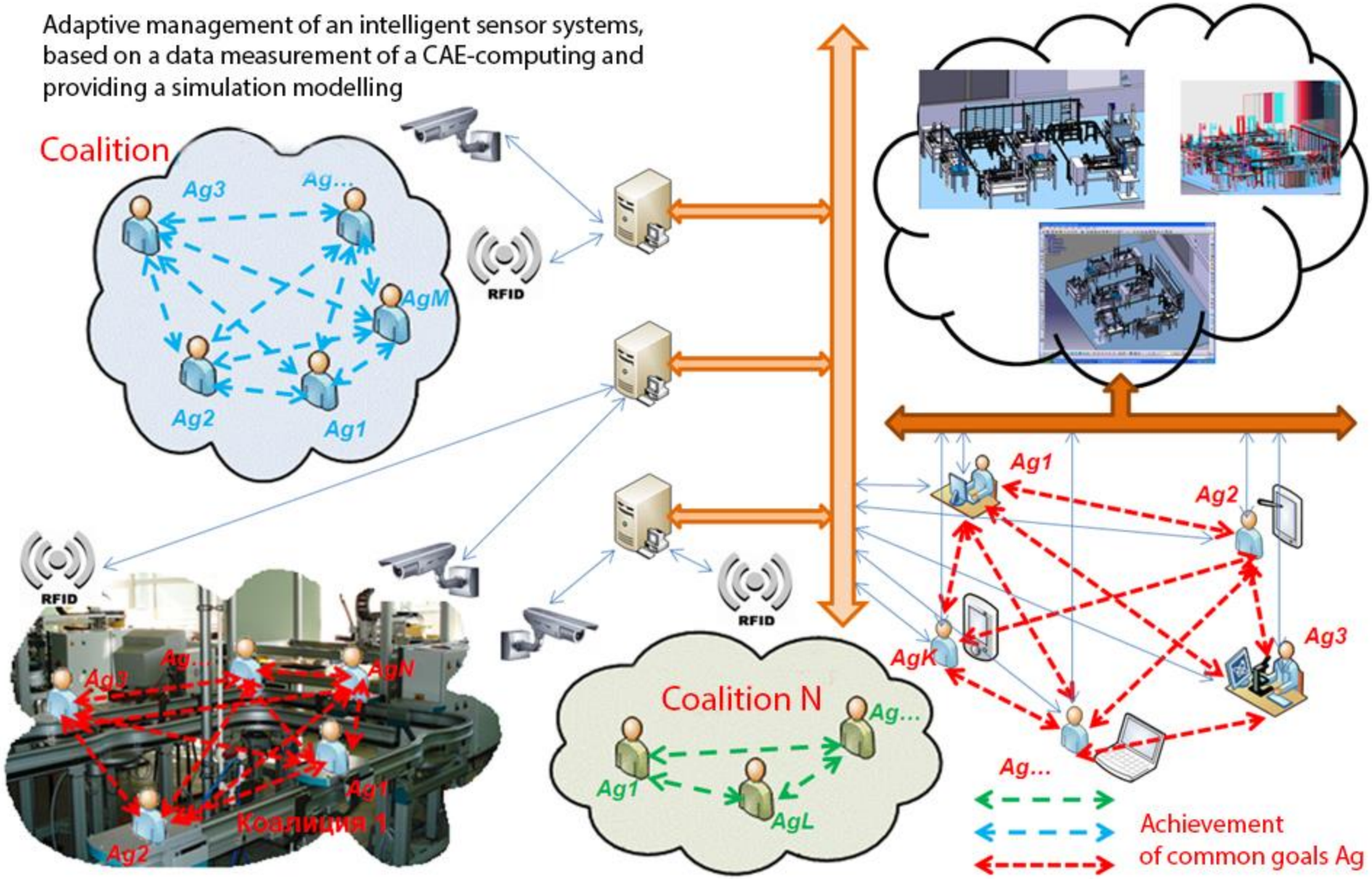

Basic structure for automatic process control system

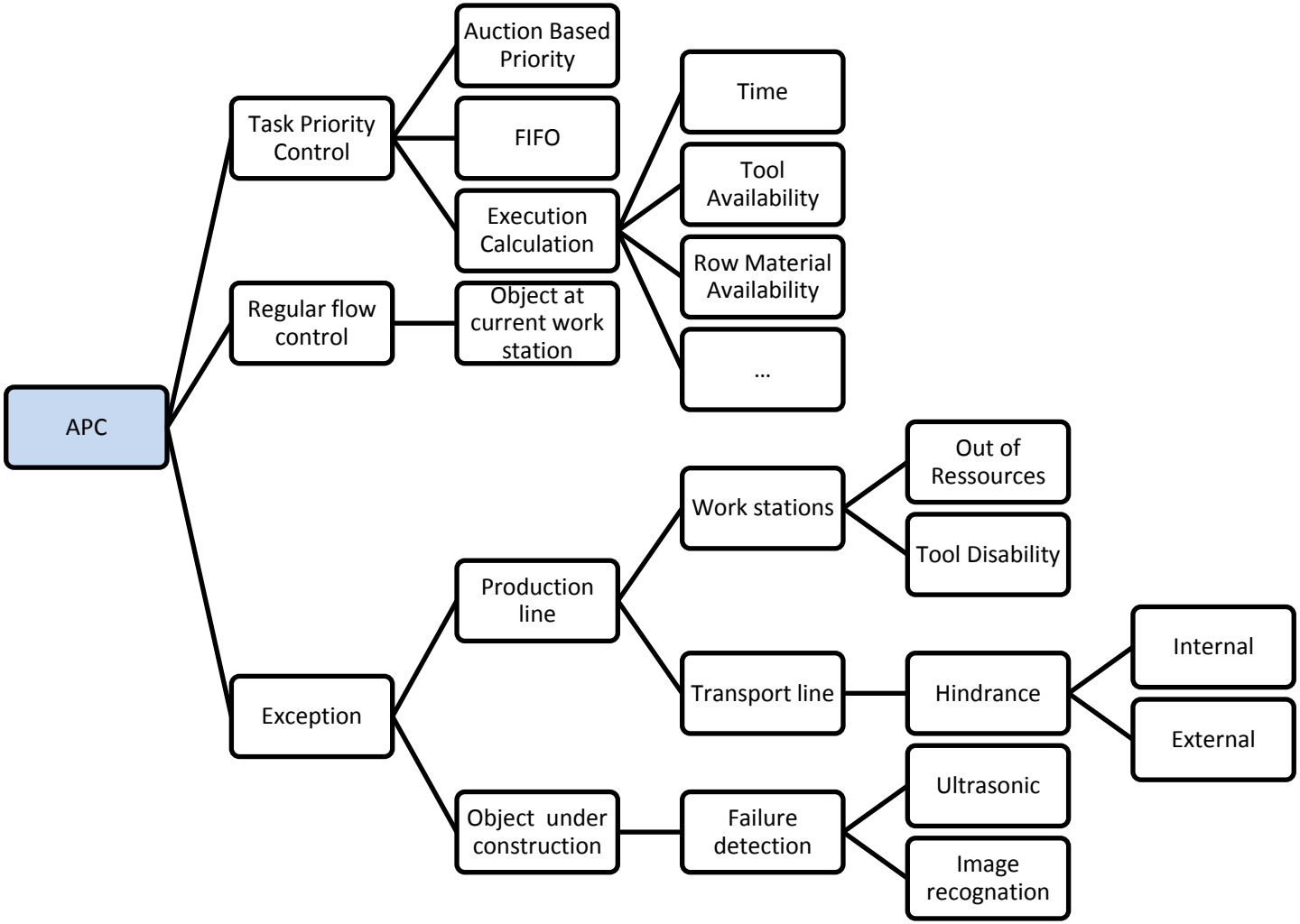

Intelligent manufacturing systems

1. Process modeling of automated device assembly and installation of prototype assembly line;

2. Development of systems for industrial process control based on automatic identification of objects;

3. Development and applying new additive technologies.

Hybridization as a key element of modern additive technologies development

Hybridization of equipment(AdapTEq):

Development of a universal device that combines the capabilities of different types of equipment

Hybridization of materials(PCM in AT):

New types of materials that combine several components and require specialized technology of mixing during manufacture of the product

Hybridization of technology:

Correcting deficiencies technologies by combining various processes or integrating new processes with existing

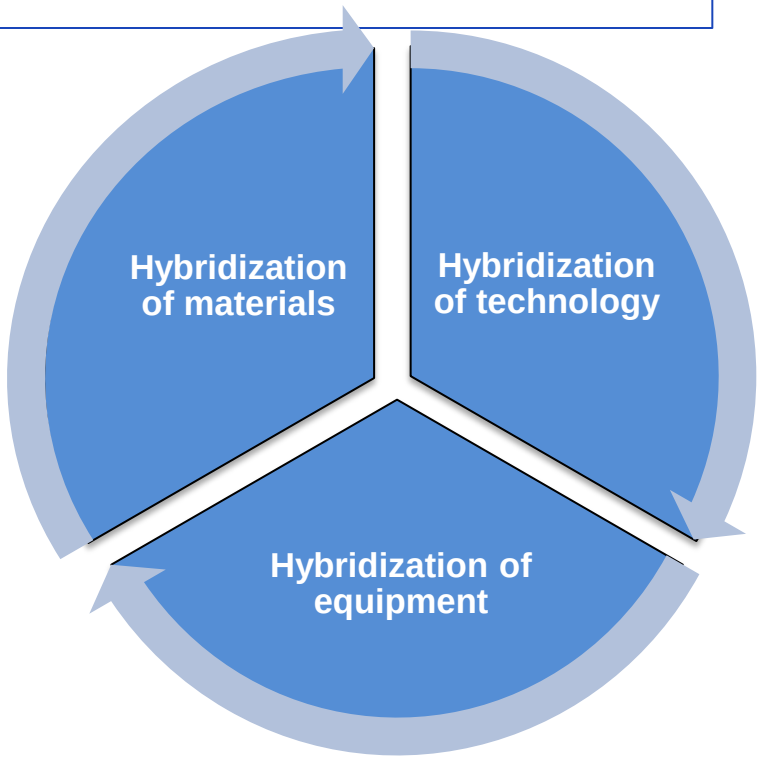

ADAPTEQ, Abbr. from the ADAptive Platform of Technological Equipment

Platform of Adaptive Technology (**ADAPTEQ**) is a software-hardware complex for the creation of various types of industrial equipment with numerical control. The basis of ADAPTEQ - universal chassis, which serves as a mechanism for moving the working bodies that determine the type of of equipment and **TAPS** (**T**echnological **A**utomation **P**ython based **S**ystem - process automation system based on high level programming language Python)

ADAPTEQ.
The principle of modularity in hybrid equipment

UTC + WM + TAPS = ADAPTEQ

UTC – *Universal Three-axis Chassis*
WM – Work Module (Remanufactured piece of equipment what allowing make a conversion from one type of device to another type)

Equipment that can be created on the basis of the proposed platform:


Lathe and milling CNC


Engraver


Laser cutter


3D-printer


CMM


Pick'n'Place machine


Sorter


Dispenser of chemical reagents

Students involved in all process

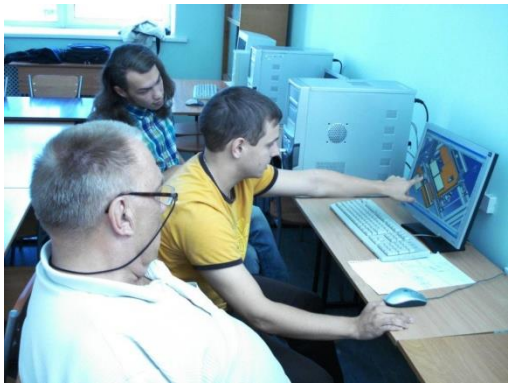

1. Design

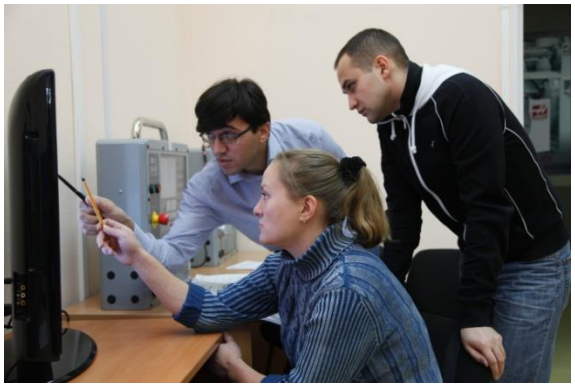

2. CNC programming

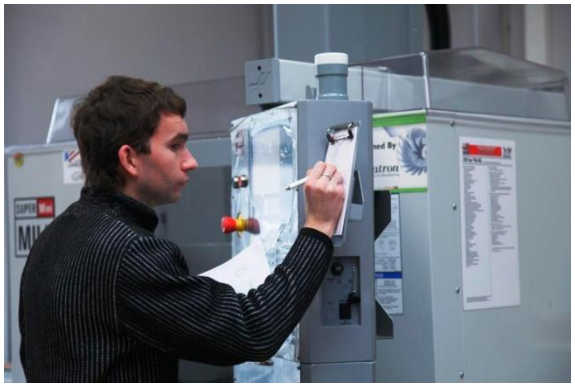

3. Production

4. Measurements

5. Testing

ITMO UNIVERSITY

Thank you !